SARO TECH

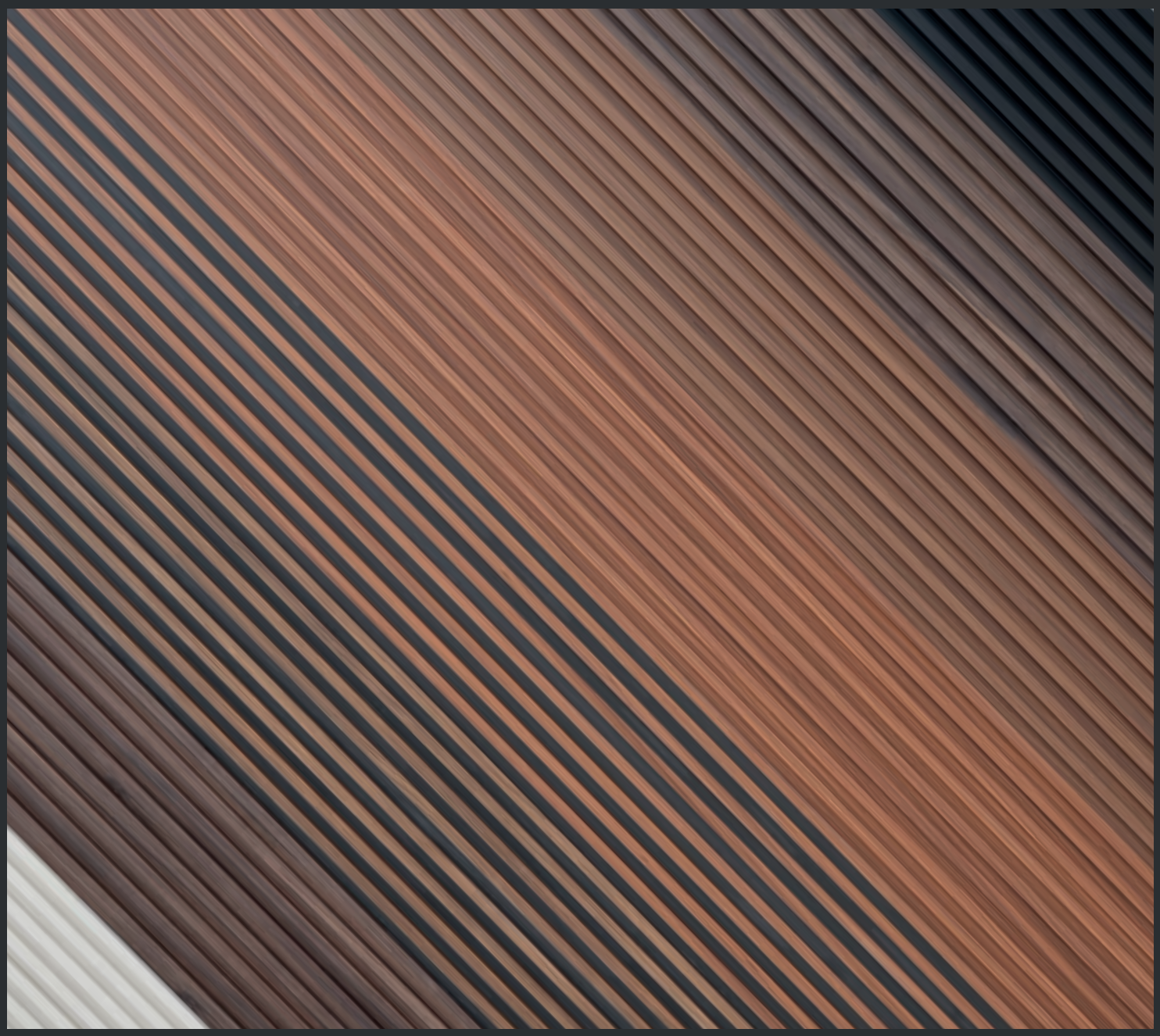

Innovative ideas,
inspired living

Interior

Installation Guide:

Laminated Wall Panel – Wavy Wall Panel

Tools & Materials

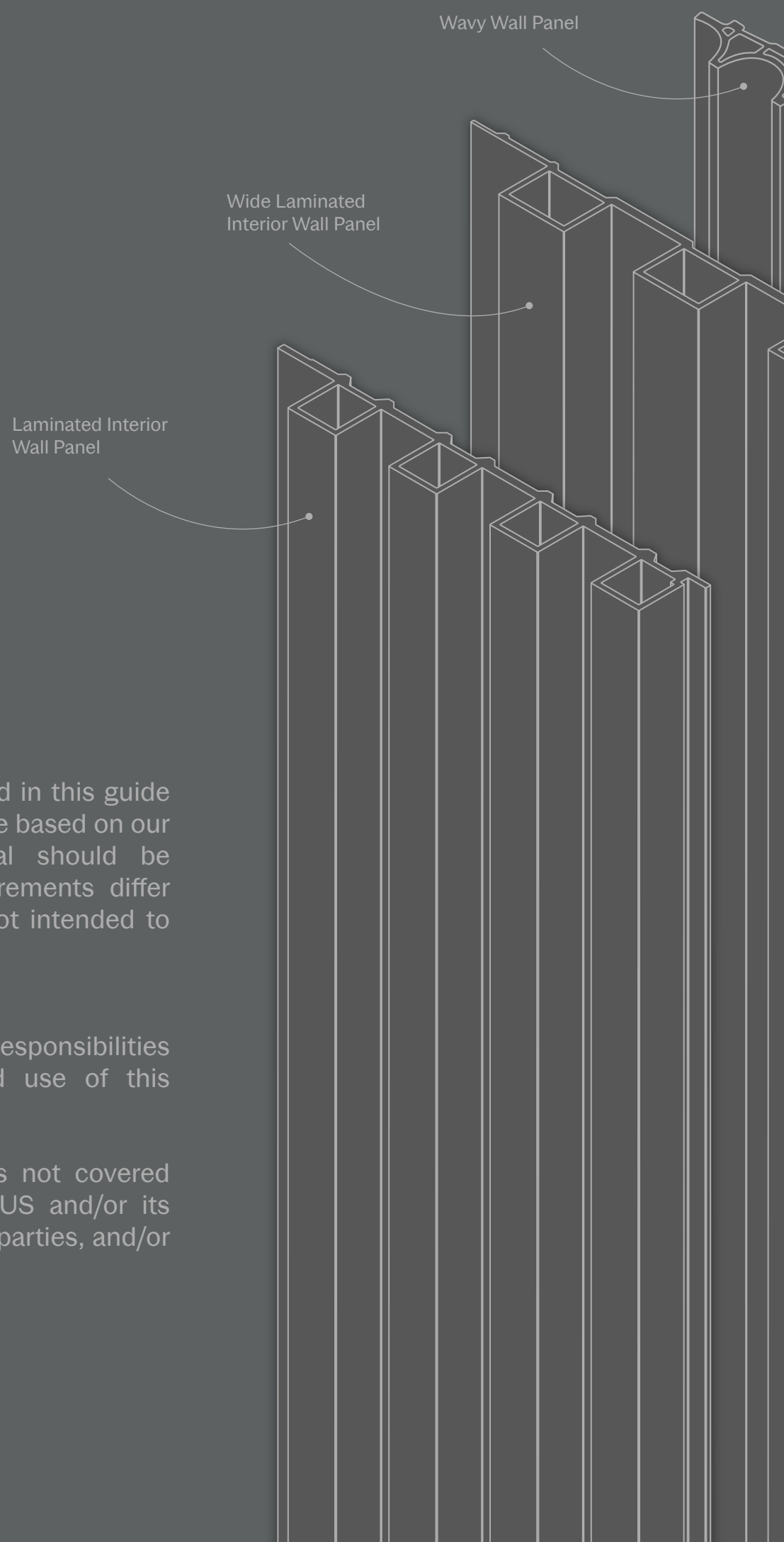

The diagrams and instructions described in this guide are for illustrative purposes only. They are based on our recommendations, and a professional should be consulted prior to installation if requirements differ from what is shown, as this guide is not intended to replace professional services.

The consumer assumes all risks and responsibilities associated with the construction and use of this product.

Material damaged during installation is not covered under the warranties of SARO TECH US and/or its subsidiaries, parent companies, related parties, and/or affiliates.

SARO TECH

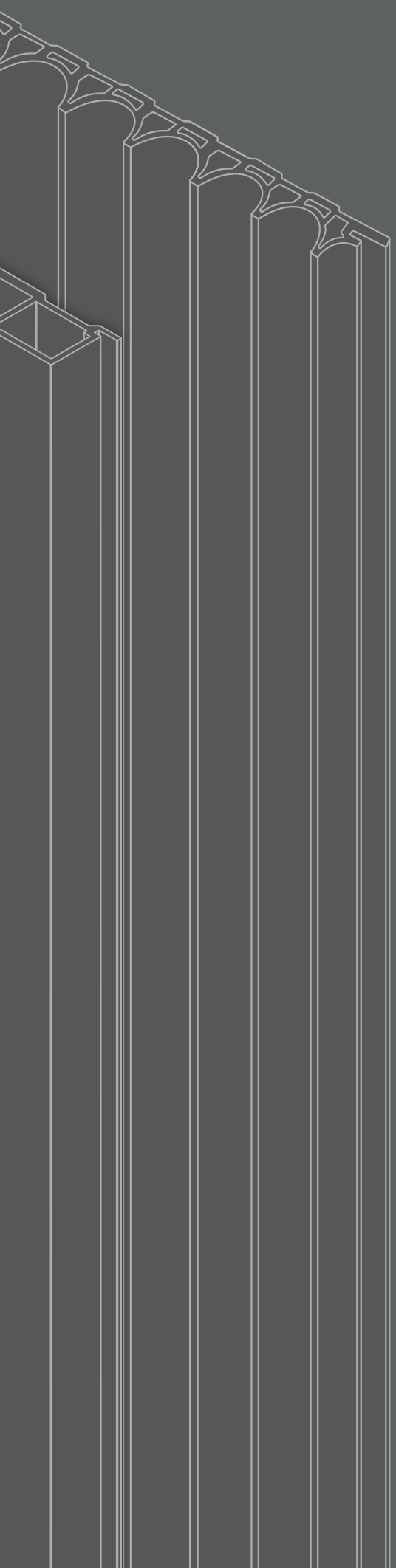

Steel Clips for Panels

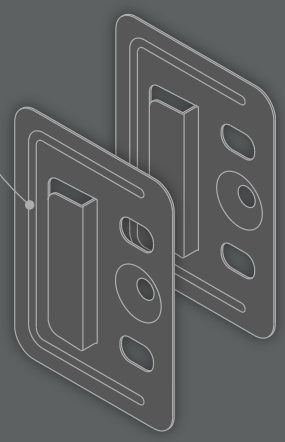

Screws

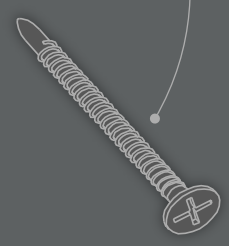

Laminated Interior Corner Trim

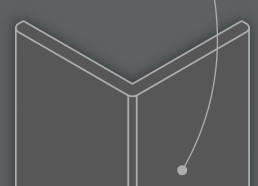

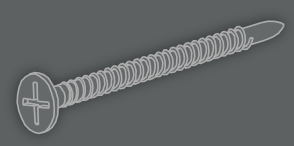

Tape Measure

Level

Cutting Tool

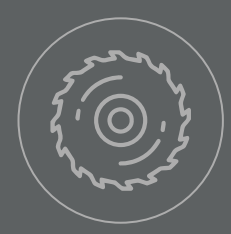

Pencil

Drill

Mounting Adhesive

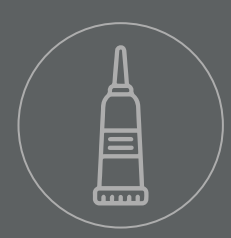

sarotech.us

1. MEASURE THE WORK AREA

Using a tape measure or the measuring tool of your choice, measure the height and width of the space where the interior wall panel will be installed.

Tools

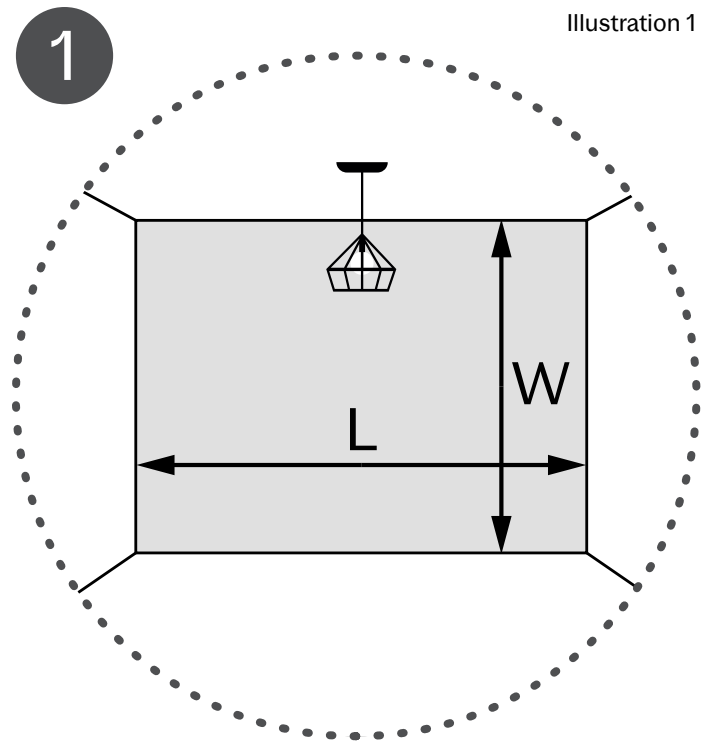

Illustration 1

2. MEASURE AND ADJUST THE MATERIAL

After measuring the area, adjust the length of the material by making the necessary cuts according to the measurements taken.

Recommended Cutting Tools:
- Wood Cutting Blade, 75–100 teeth
- Handheld Router

Cutting Tools Not Recommended:
- Hand Saw
- Coping Saw

This step is optional, as material adjustment varies depending on each client's project.

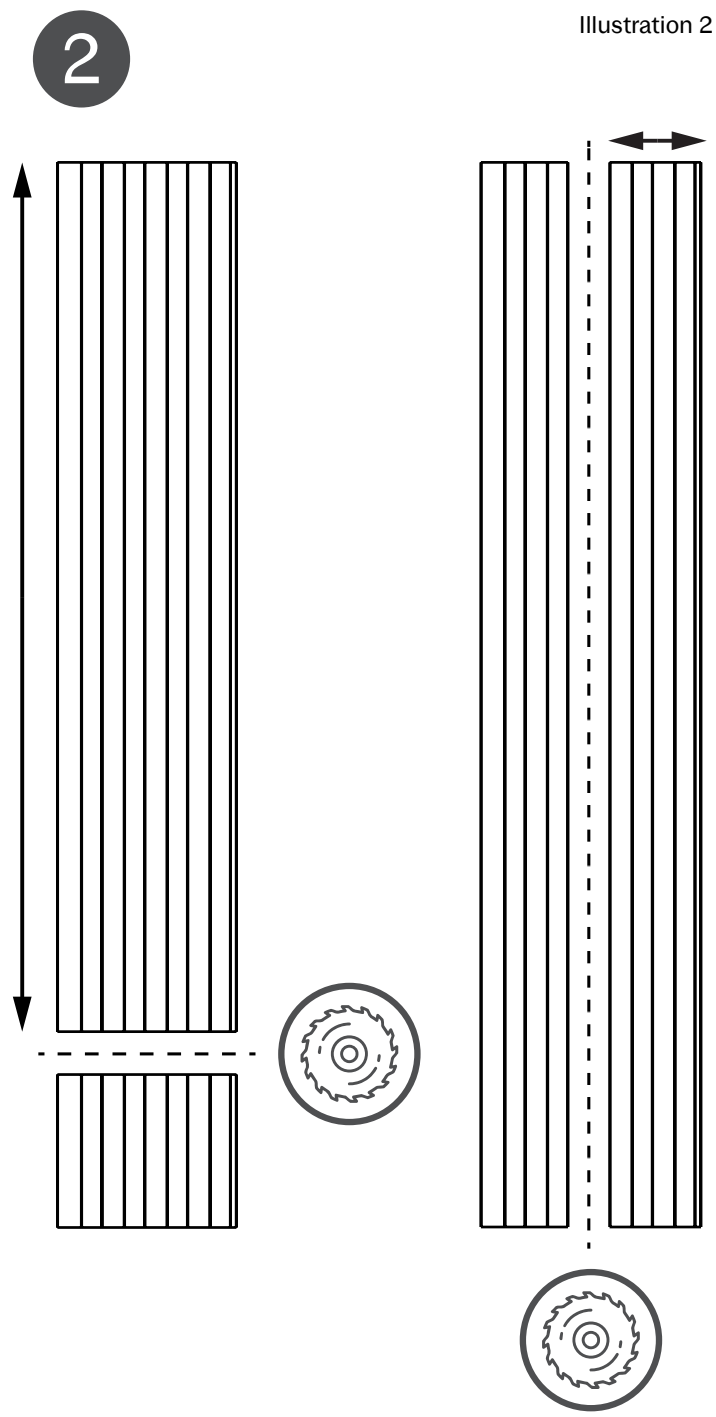

Illustration 2

3

Illustration 3

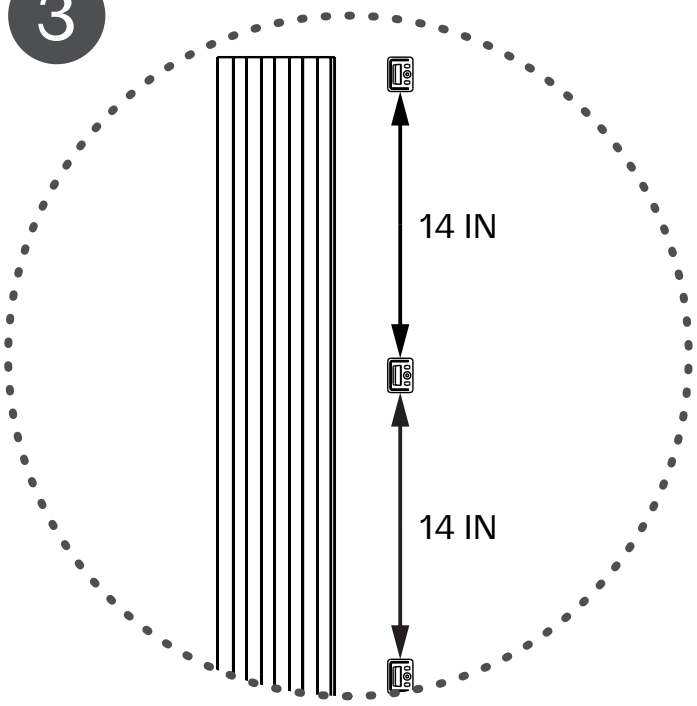

4

Illustration 4

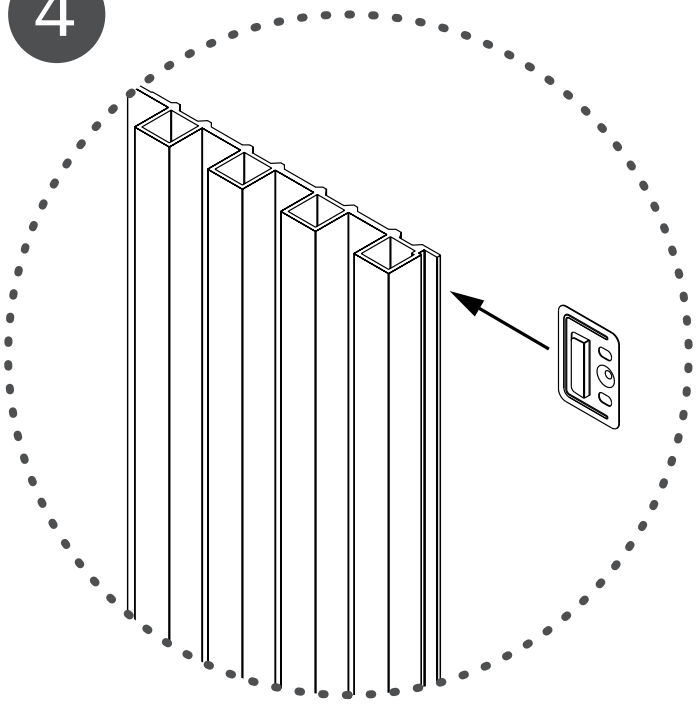

5

Illustration 5

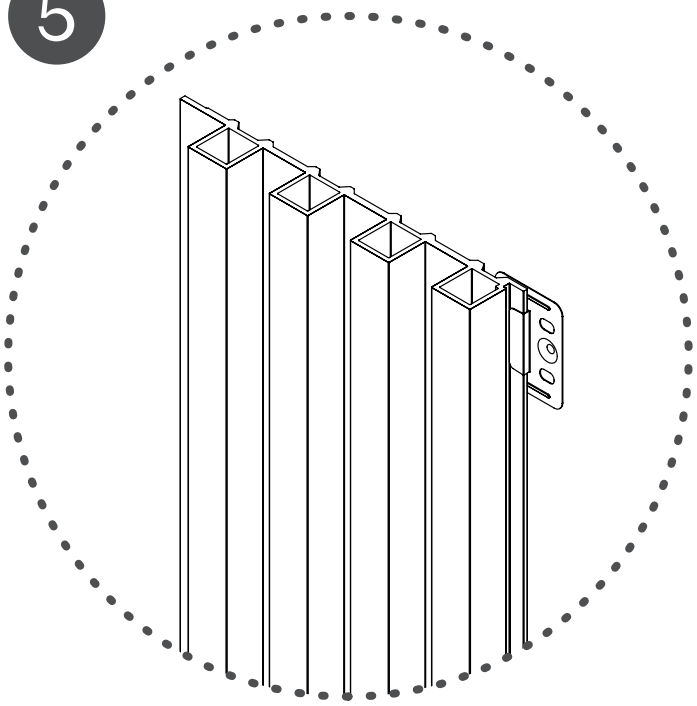

3. INSTALL CLIPS

Fit the clips mentioned in the “Tools & Materials” section into the shorter tab of the interior wall panel (Pages 2 & 3).

The panel installation clip can be found in our Sarotech Product Catalog.

It is recommended to place them every 12 to 14 inches along the length of the piece (Illustrations 3, 4 & 5).

Tools

4. MARK GUIDELINES TO SECURE THE PIECE

After completing the previous step, use a level to position the piece in the installation area and mark the guide points with a pencil (Illustrations 6, 7 & 8).

Tools

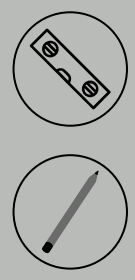

6

Illustration 6

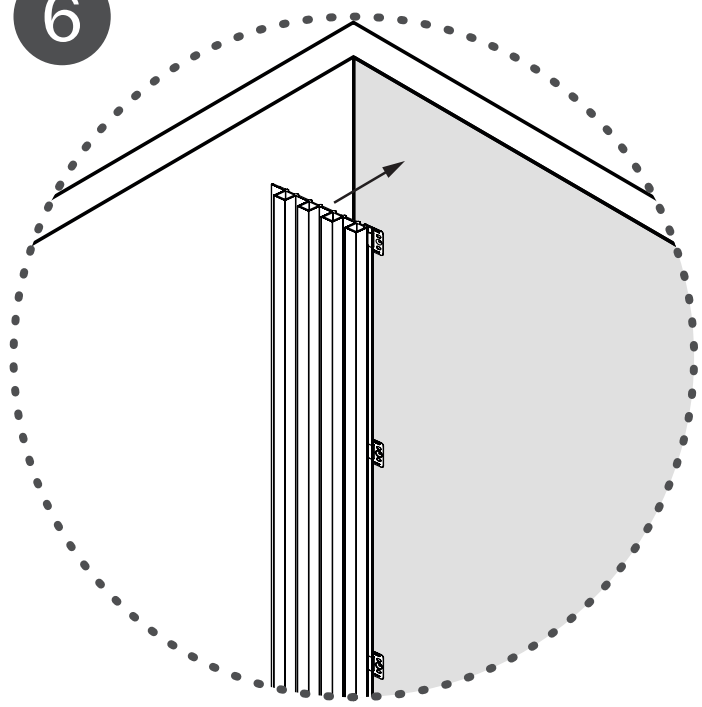

7

Illustration 7

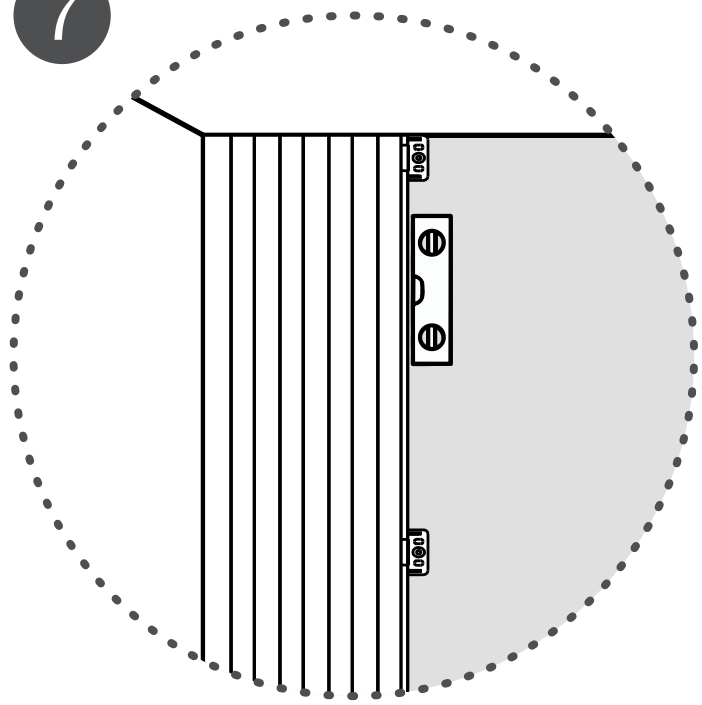

8

Illustration 8

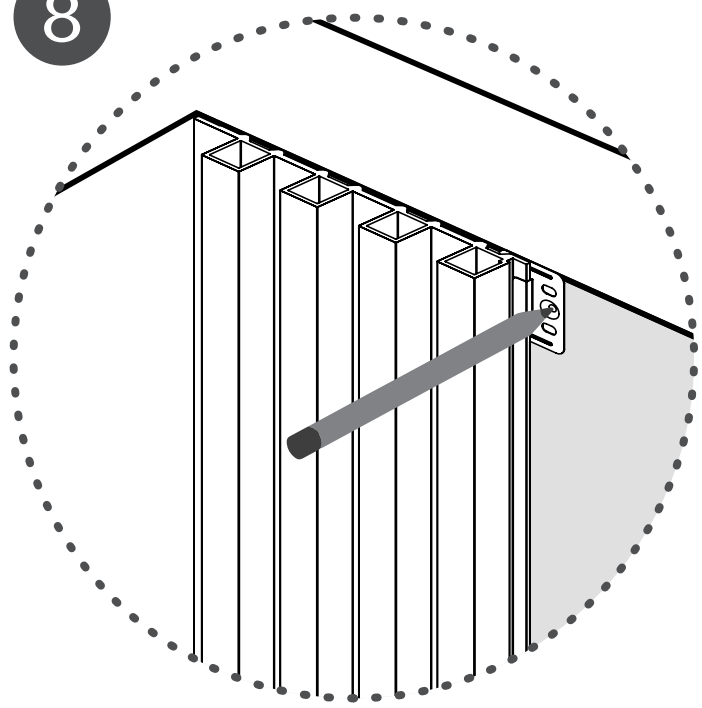

9

Illustration 9

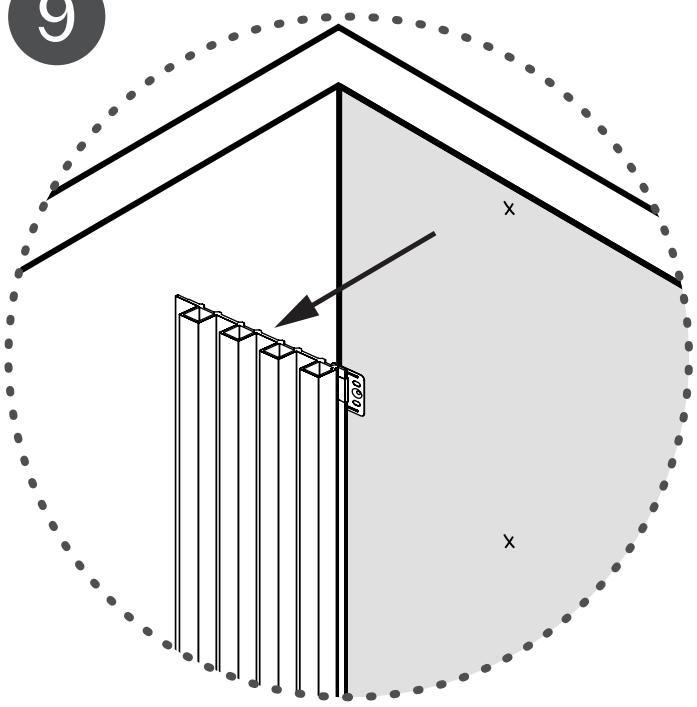

10

Illustration 10

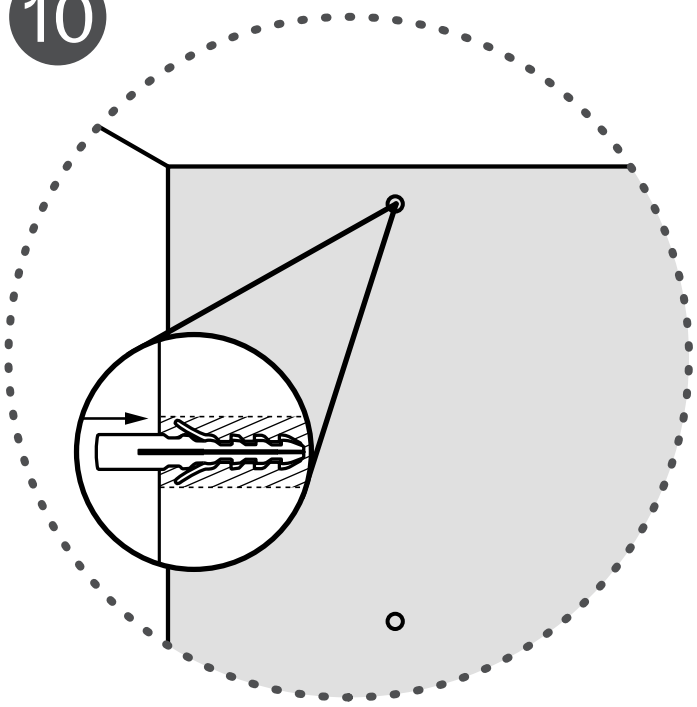

11

Illustration 11

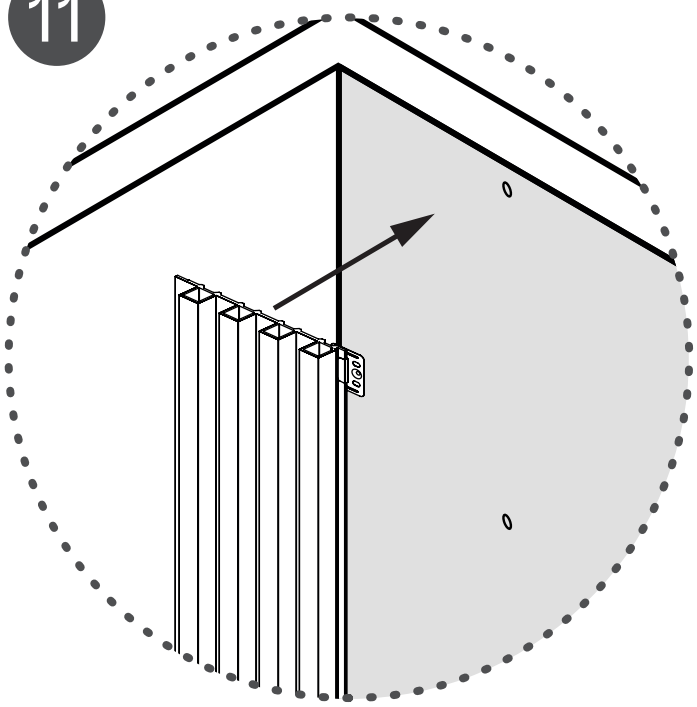

5. DRILL THE MARKED POINTS

Remove the piece to drill the previously marked points, and insert a wall plug into each hole (Illustrations 9 & 10).

Tools

6. INSTALL THE FIRST PIECE

Reinstall the interior wall panel and position the clips over the holes made in the previous step.

7. SECURE THE PIECE

Using a drill, secure the interior wall panel to the surface with screws as the fastening element (Illustrations 12 & 13).

Tools

12

Illustration 12

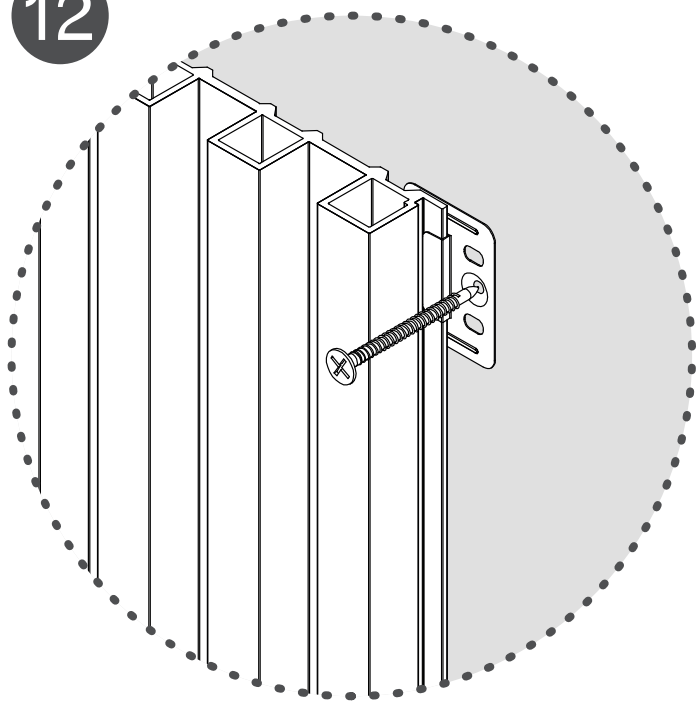

13

Illustration 13

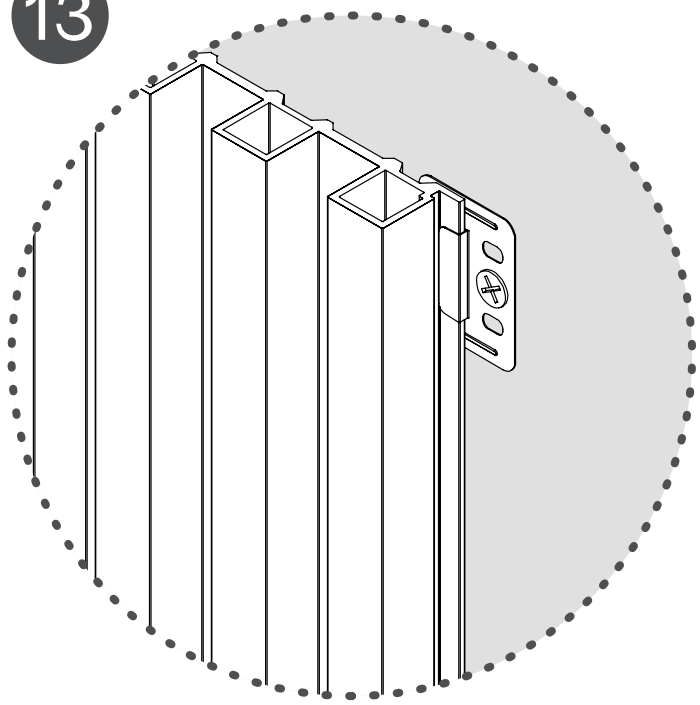

14

Illustration 14

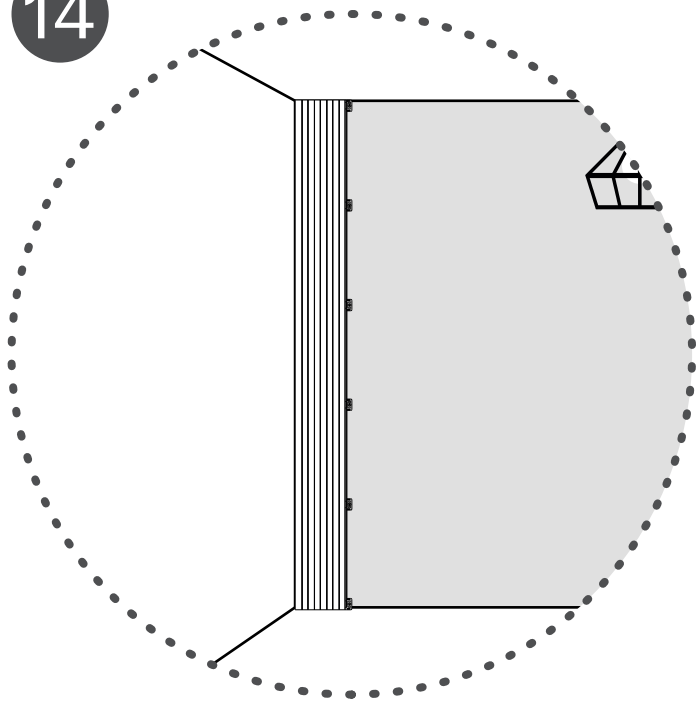

15

Illustration 15

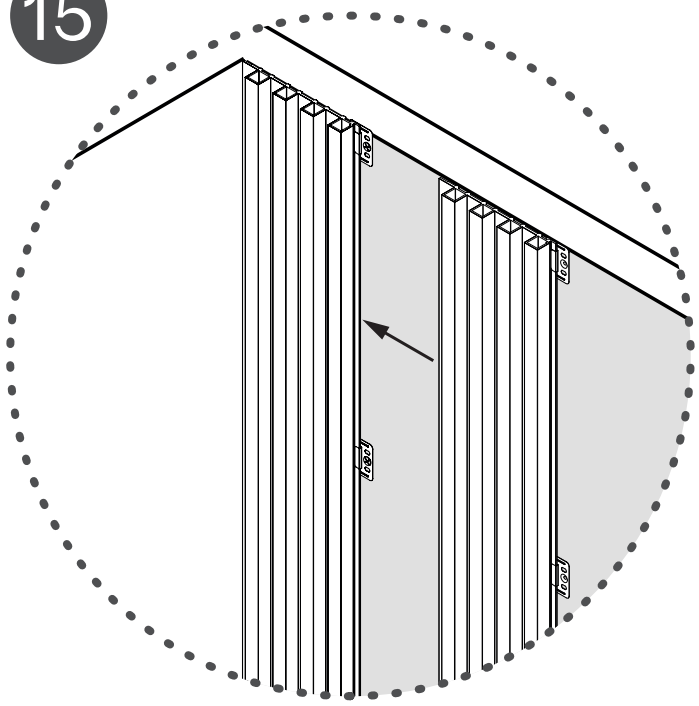

16

Illustration 16

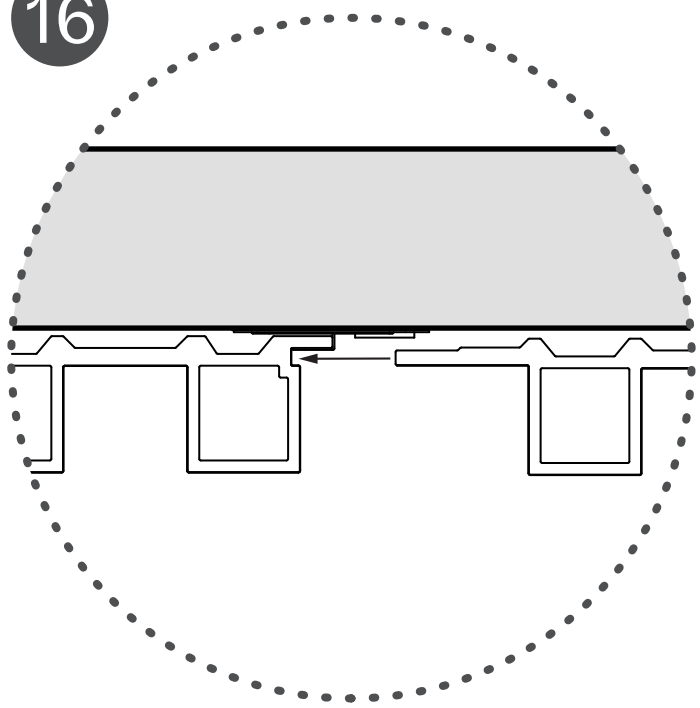

17

Illustration 17

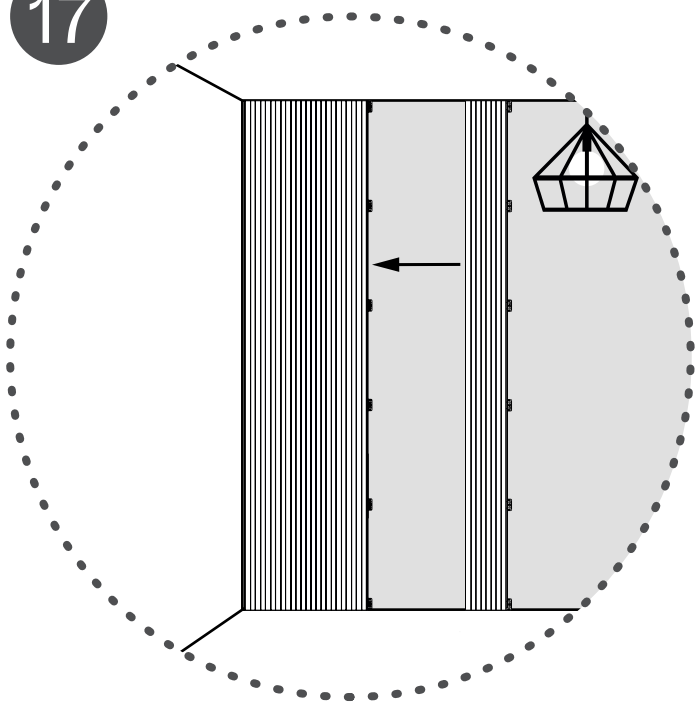

Once the first interior wall panel piece has been secured, it will serve as a guide for installing the subsequent pieces.

8. INSTALL THE NEXT PIECE

To install the next piece, repeat Step 3.

Position it by fitting its larger tab—that is, the one without clips—into the groove of the previously installed panel (Illustrations 15 & 16).

Once this is done, repeat Steps 4, 5, 6, and 7.

Tools

9. INSTALLATION OF THREE OR MORE PANELS

If installation of a third interior wall panel or more is required, the same procedure should be repeated.

Begin with Step 3, then proceed to Step 8, and continue with Steps 4, 5, 6, and 7, in that order.

Tools

10. THE FINAL PIECE

To install the final interior wall panel piece, we suggest three different methods. Choose the one that best suits your needs and preferences.

Option No. 1 (page 10)
Installation with Clip

Option No. 2 (pages 11 & 12)
Installation with Adhesive

Option No. 3 (pages 13, 14 & 15)
Installation with Corner Trim

18

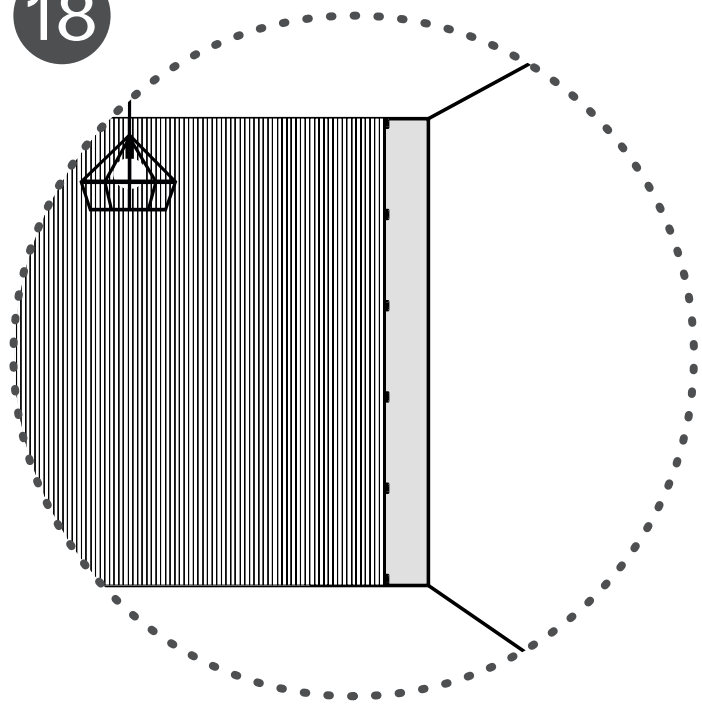

Illustration 18

19

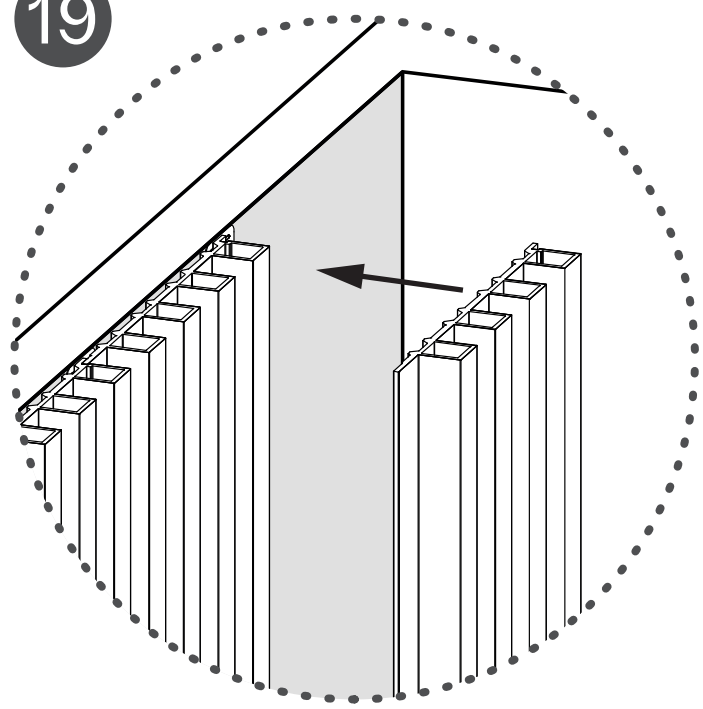

Illustration 19

Option No. 1

Installation with Clip

1.1 SECURE THE PIECE WITH INSTALLATION CLIP

Repeat the same procedure: begin with Step 3, then proceed to Step 8, and continue with Steps 4, 5, 6, and 7, in that order.

To obtain a visual representation of the final installation result, you can refer to illustrations 21 & 22.

Tools

20

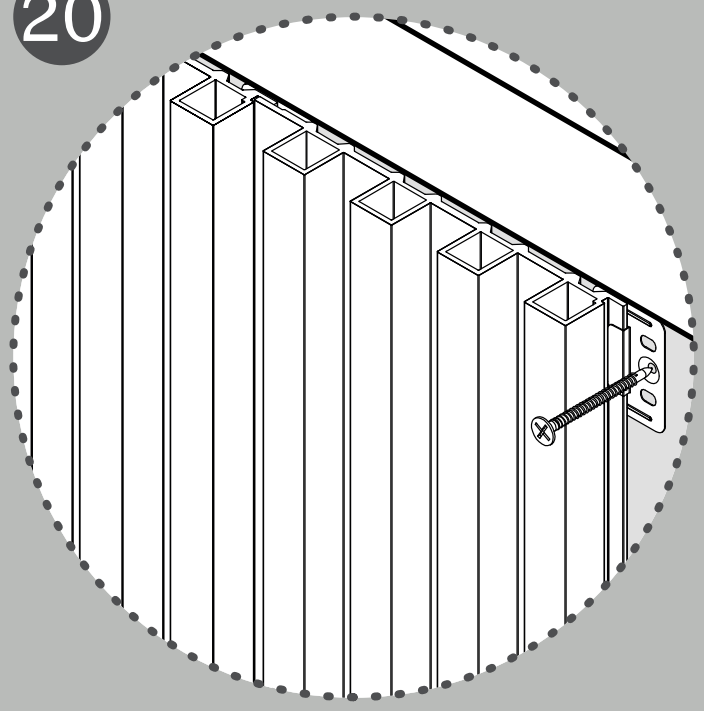

Illustration 20

21

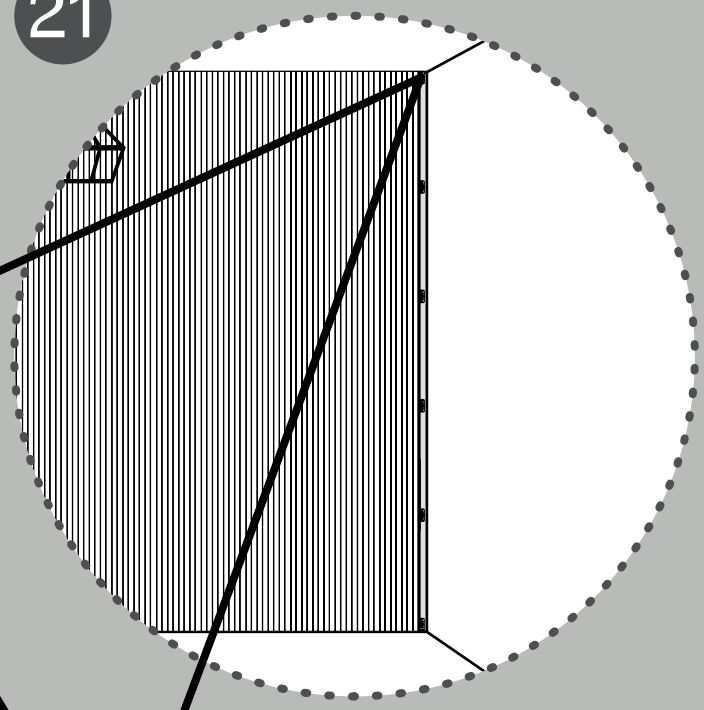

Illustration 21

22

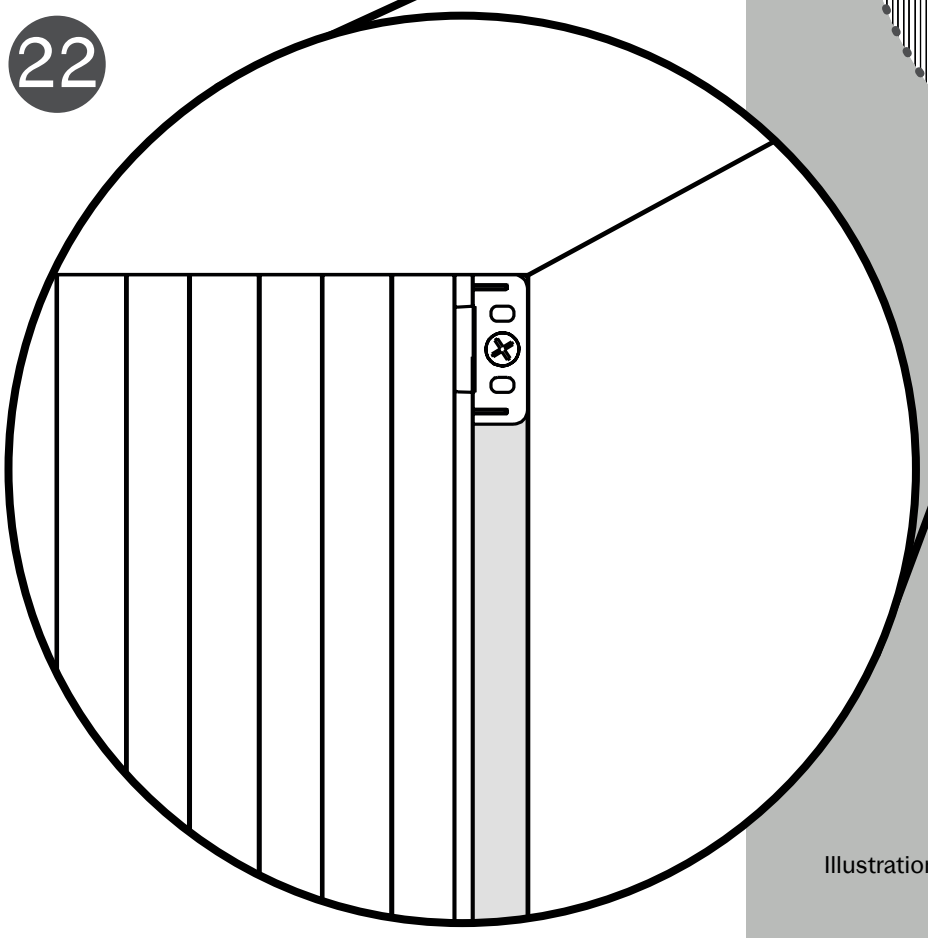

Illustration 22

23

Illustration 23

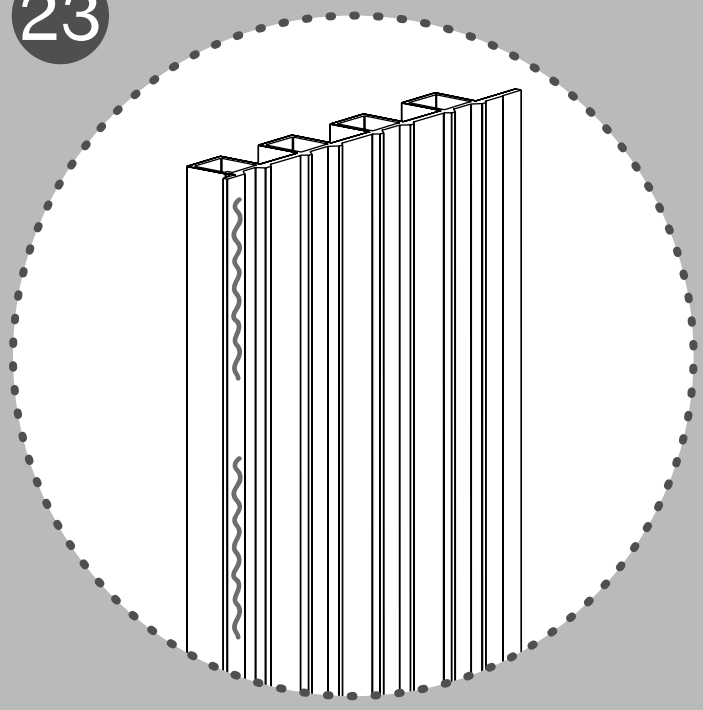

24

Illustration 24

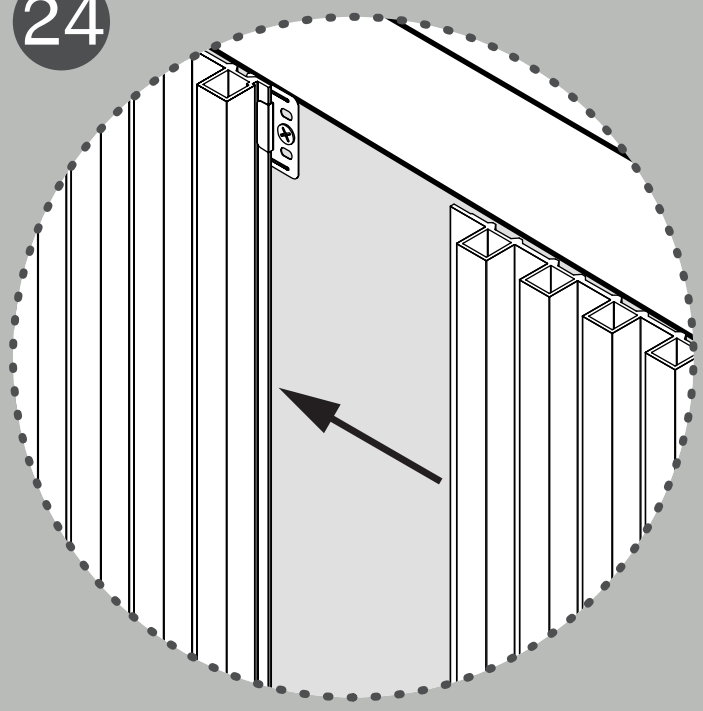

25

Illustration 25

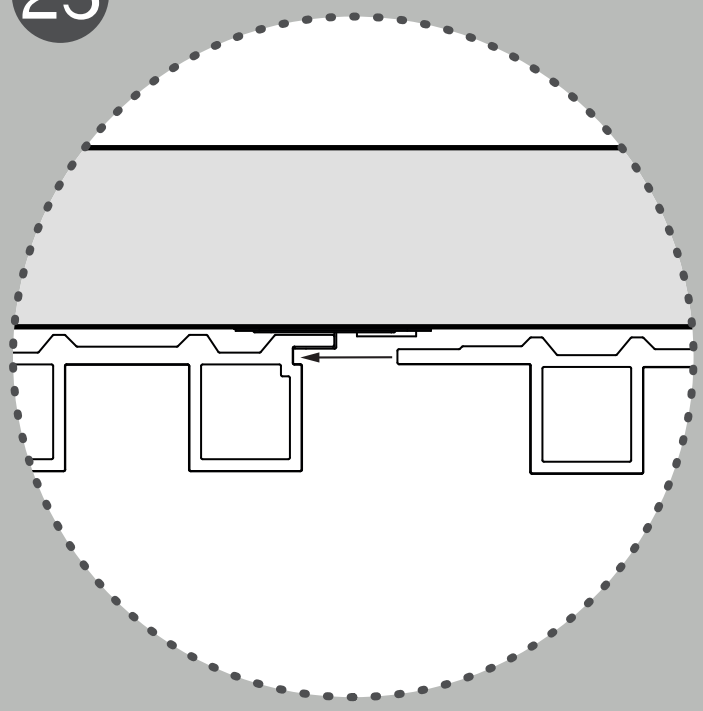

Option No. 2

Installation with Adhesive

2.1 SECURE THE PIECE WITH ADHESIVE

Apply the adhesive to the back of the piece on the side of the shorter tab (Illustration 23).

It is recommended to follow the usage instructions specified by the mounting adhesive of your choice.

Tools

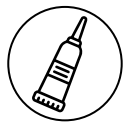

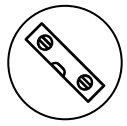

2.2 Next, fit the larger tab into the groove of the previously installed second-to-last piece (Illustrations 24 & 25).

Option No. 2

Installation with Adhesive

To obtain a visual representation of the final installation result, refer to illustrations 26 & 27.

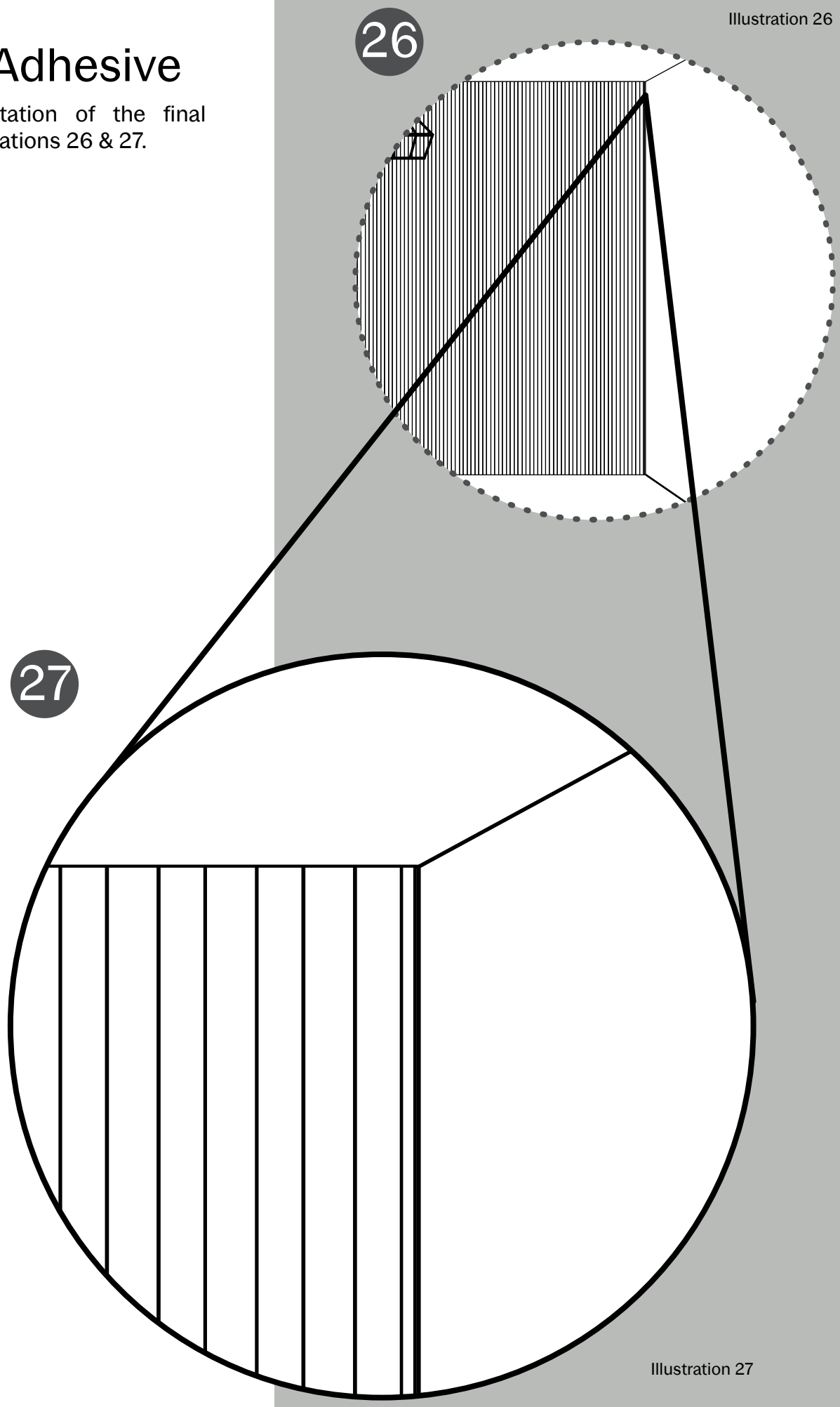

Illustration 26

Illustration 27

28

Illustration 28

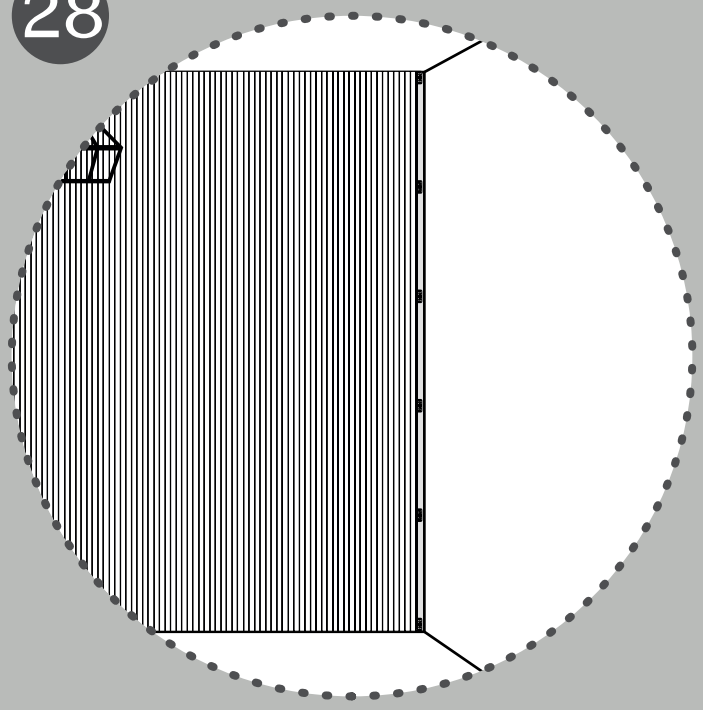

29

Illustration 29

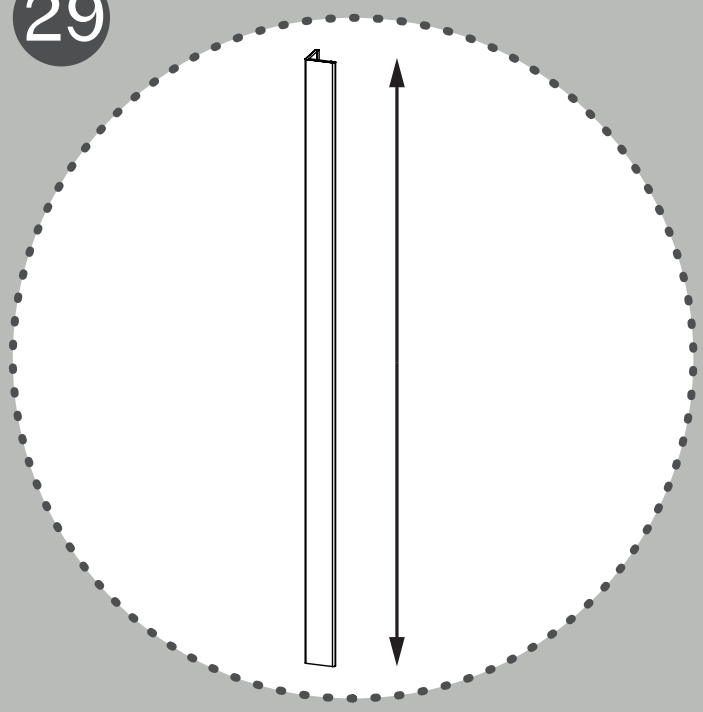

30

Illustration 30

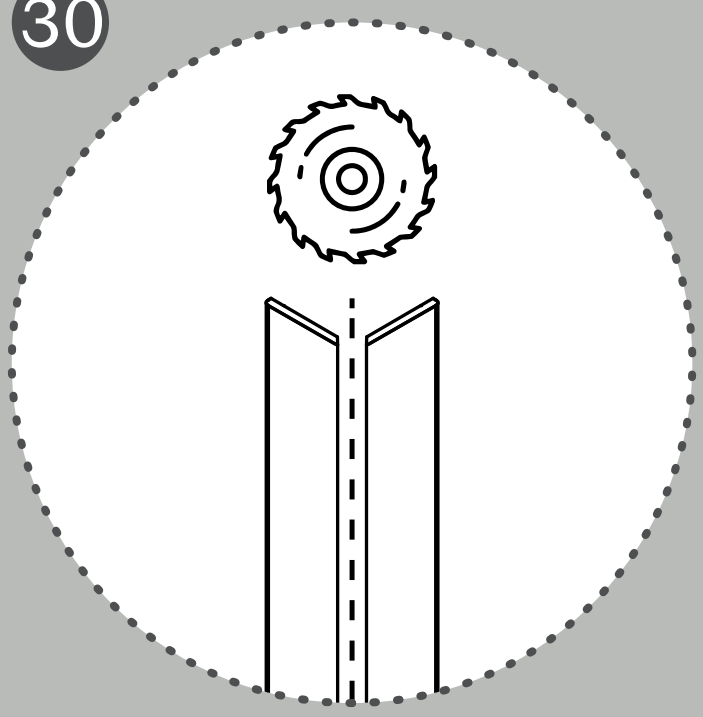

Option No. 3

Corner Trim Installation

3.1 SECURE THE PIECE WITH CORNER TRIM

Repeat the same process as option No. 1 (Page 10).

Tools

3.2 After installing the final piece, we will use the laminated interior corner trim, which can be found in our Sarotech Product Catalog.

As a first step, adjust the length of the material (Illustration 29).

Tools

Next, make a cut along the marked angle, as shown in illustration 30.

This step is optional, as material adjustment varies depending on each client's project.

Option No. 3

Corner Trim Installation

3.3 To attach it, apply adhesive to the back of the piece (Illustration 31).

It is recommended to follow the usage instructions specified by the mounting adhesive of your choice.

Tools

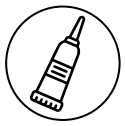

3.4 After applying the adhesive, assemble it by fitting the side where the cut was made into the groove of the last installed piece (Illustrations 32 & 33).

Tools

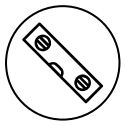

The corner finishing trim can also be used with Option 2: Installation with Adhesive.

31

Illustration 31

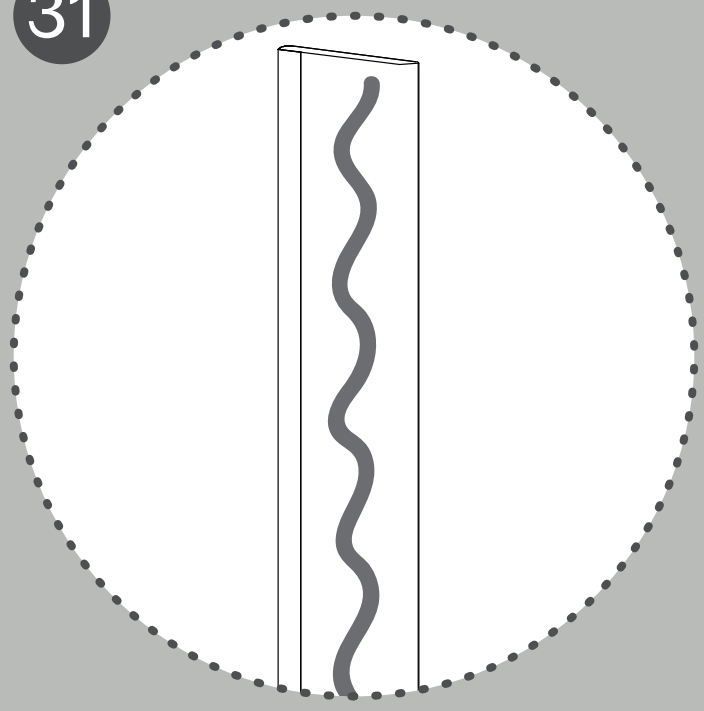

32

Illustration 32

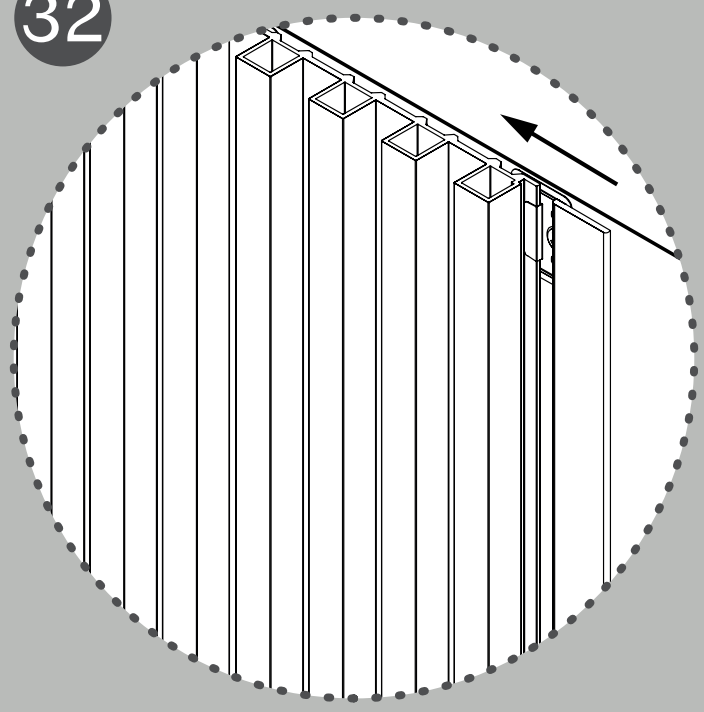

33

Illustration 33

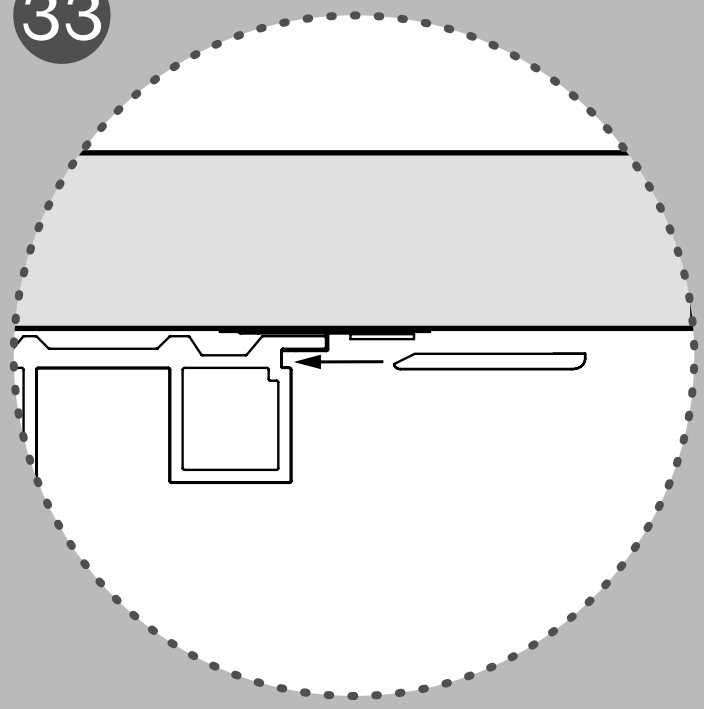

Option No. 3

Corner Trim Installation

To obtain a visual representation of the final installation result, please refer to the following illustrations 34 & 35.

34

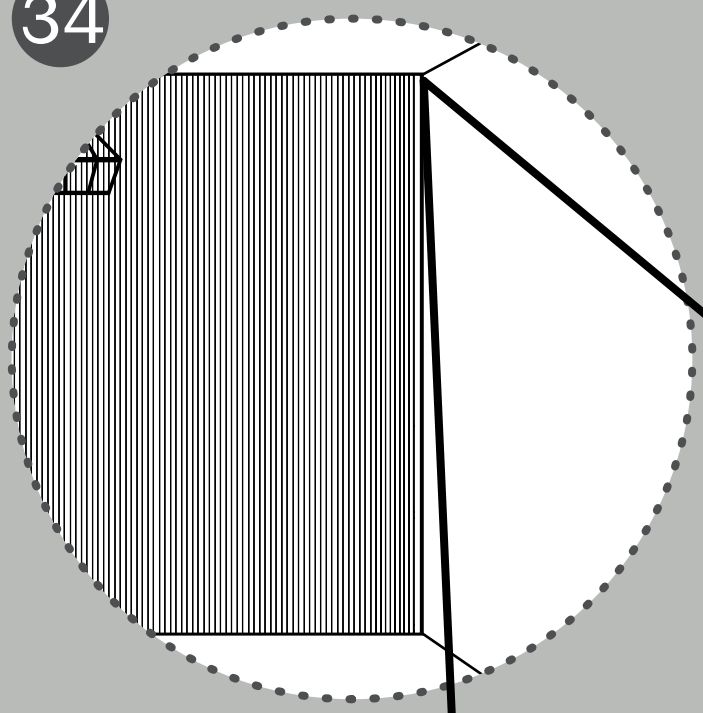

Illustration 34

35

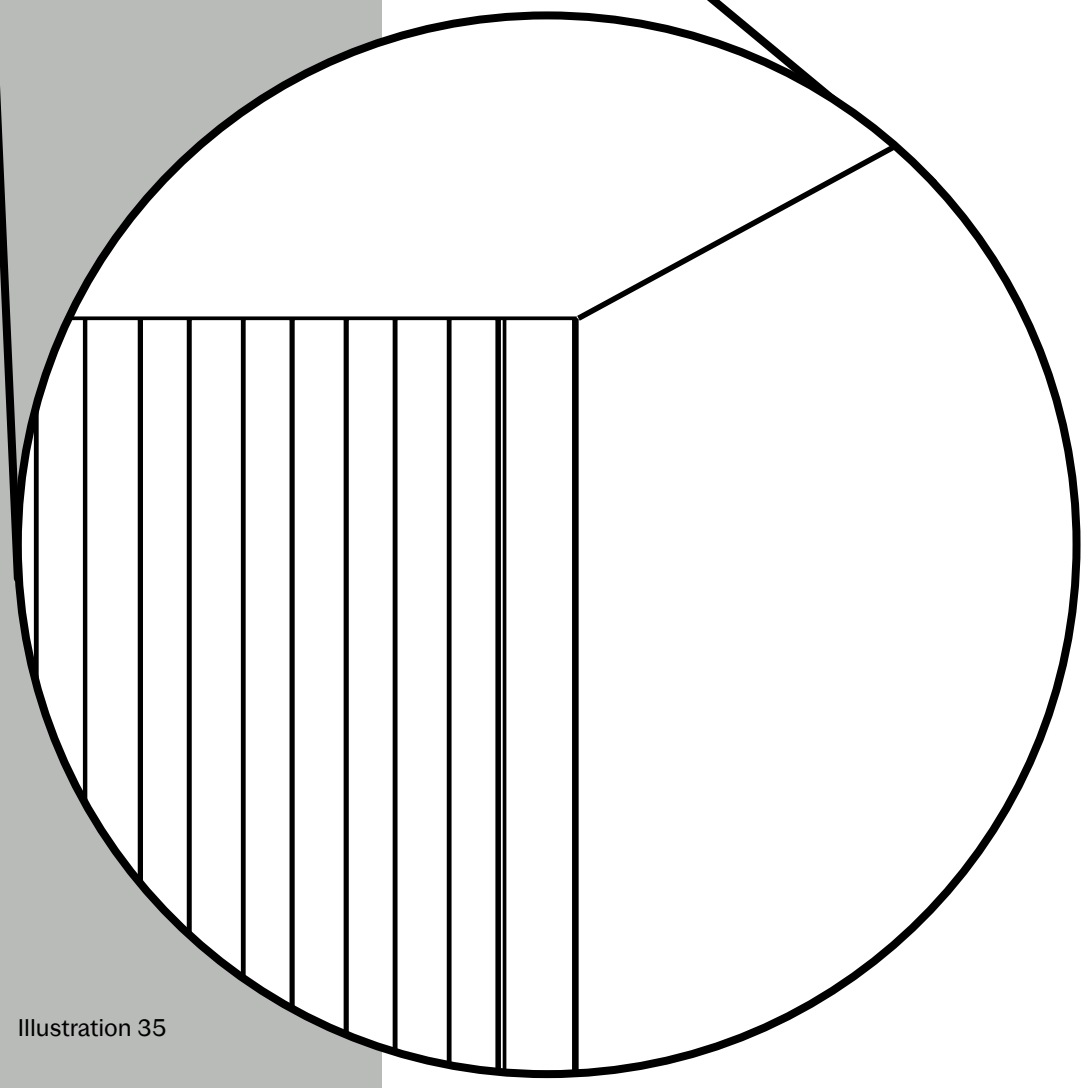

Illustration 35

Decorate & enjoy your space...

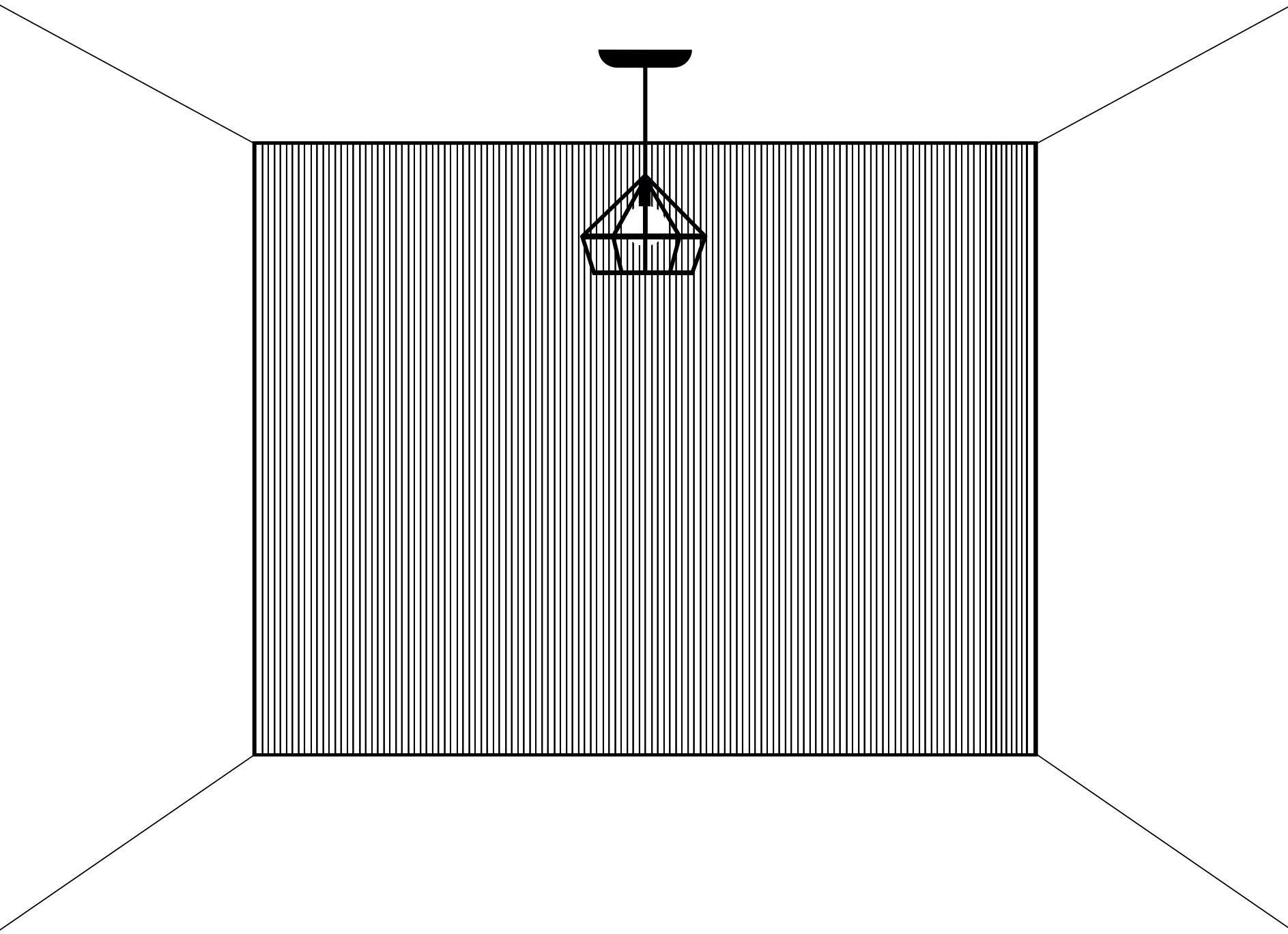

SARO TECH